マヤコ | Mayako

SETUP SHEET
V4 - MX8E-26 - LCG

Reset Form

DRIVER Pekko Iivonen
TRACK West Side Raceway
RACE ABC Jakarta DATE
TEMP 35 BEST LAP Fastest BEST RESULT Fastest

TRACK SIZE ☐TIGHT ☐MEDIUM ■OPEN
SURFACE ☐DUSTY ■LOW GRIP ☐BLUE GROOVE ☐OILED ☐MEDIUM GRIP ☐HIGH GRIP
CONDITION ■SMOOTH ☐BUMPY ☐50/50 ☐CLAY ☐GROOVE WITH DUST ☐EDGY
QUALIFYING POS. 1 FINAL POS. 2

ESC
BOOST
DRAG
BRAKE

MOTOR 2000kv
BATTERY 5500mah
BATTERY TYPE ■ SADDLE ☐ FULL--Brick--SHORTY☐

FRONT DIFF OIL 12.5k OIL QUANTITY(gr) 2.5
CENTER DIFF OIL 15k OIL QUANTITY(gr) 2.5
REAR DIFF OIL 8k OIL QUANTITY(gr) 2.5

DIFF GEAR 43
DIFF PINION 13
SPUR GEAR 59
PINION 17

SHOCKS

	FRONT	REAR
OIL	700	600
PISTON	7x1.25	7x1.25
SPRING	Black	Black
LENGTH	kit	kit
VISIBLE SHAFT LENGTH	kit	kit
REBOUND	0	0
SHOCK END	■LONG ☐SHORT	■LONG ☐SHORT
SHOCK TYPE	■EMULSION	☐BLADDER

NOTES: LCG Shock cap, ultimate angled hole pistons

FRONT END

SHOCK TOWER ■ALUMINIUM ☐CARBON

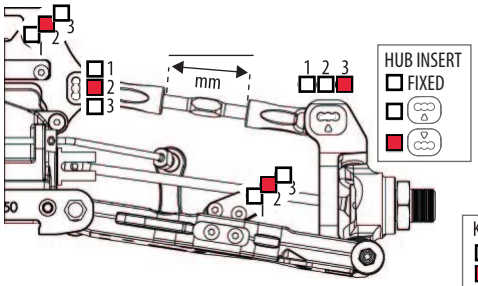

HUB INSERT ☐FIXED ☐ ■

KNUCKLE POSITION ☐UP ☐MIDDLE ■DOWN

HEX WIDTH ■4 mm ☐5 mm ☐6 mm

KPI OPTION ☐KPI 0 ■KPI 0.5 ☐KPI 1

C HUB CASTER ☐CASTER 0.5 (DOT) ■CASTER 1 (1 MARK) ☐CASTER 2 (2 MARKS)

FRONT ARM POSITION ☐FRONT ☐MIDDLE ■REAR

ARM STIFFNESS ■STOCK ☐SOFT

ARM INSERT ☐NO ■PLASTIC ☐CARBON

FRONT AXLE CVD ☐98 ☐100 UNIVERSAL ☐96 ■99

KNUCKLE PLATE ■1 LONG ☐2 SHORT

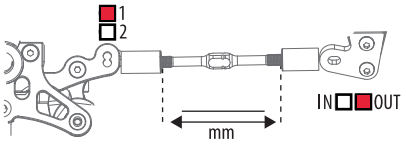

SERVO SAVER ☐YES ■NO

BUMP STEER ON ACKERMAN ■UP ☐DOWN SHIM -4 mm

BUMP STEER ON KNUCKLE ☐UP ■DOWN SHIM 0 mm

KICK UP: 1, 0,5, 0, 0,5, 1

		A PLATE	B PLATE	TOWER
☐+2mm SHIM (NO upper gearbox shim)	+2	☐	☐	☐
☐+1mm SHIM (1mm upper gearbox shim)	+1	☐	☐	☐
■NO SHIM (2mm upper gearbox shim)	0	■	■	■

INSERT ☐PLASTIC ■CARBON

CHASSIS

☐SETUP STATION

	FRONT	REAR
TOE	1.5	1.5
CAMBER	2	2
RIDE HEIGHT	25	27
DOWNTRAVEL (WITH TYRES)		
DOWNTRAVEL (on 36mm blocks)	3	-5
ANTI ROLL BARS	2.1	2.4

SELECT "FULL" or "SHORTY" BRICK TO SET

BATTERY POSITION FRONT MIDDLE BACK

WEIGHT

REAR END

SHOCK TOWER ■ALUMINIUM ☐CARBON

SPACER IN FRONT OF HUB ___ mm

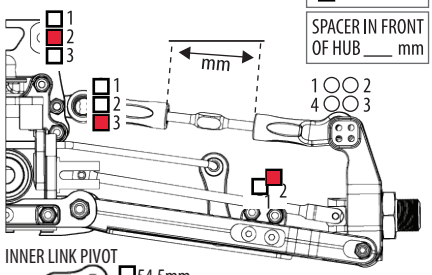

INNER LINK PIVOT ☐54.5mm ■56.5mm

ARM INSERT ☐NO ☐PLASTIC ■CARBON

OPTIONAL REAR HUB
SELECT REAR HUB TO FILL OUT

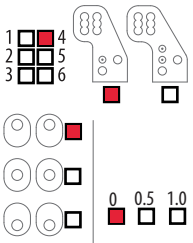

HEIGHT ■ ☐ TOE IN 0 ■ 0.5 ☐ 1.0 ☐

HEX WIDTH ☐4 mm ☐5 mm ■6 mm

REAR HUB ☐PLASTIC ■ALUMINIUM ☐3-PIECE

MPC 3-PIECE HUB
SELECT REAR HUB TO FILL OUT

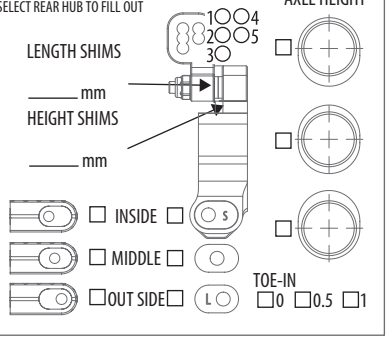

REAR AXLE CVD☐ UNIVERSAL ■91 ☐94

ANTI-SQUAT: 1, 0,5, 0, 0,5, 1

	48.5	50	54	51
TOE	3°	1,5°	1,5°	0,5°
	54.5	53	57	52

■STOCK ☐LOW

		C PLATE	D PLATE	TOWER
☐+2mm SHIM	+2	☐	☐	☐
■+1mm SHIM	+1	■	■	■
☐NO SHIM	0	☐	☐	☐

SHIM ■PLASTIC ☐CARBON CHASSIS STIFFENER | INSERT ☐PLASTIC ■CARBON

TYRES

	FRONT	REAR
BRAND		
TREAD		
COMPOUND		
WHEELS		
INSERTS		
NOTES		

RADIO SETTINGS

	THROTTLE	STEERING
DUAL RATE		
SPEED		
EXPO		

SERVO MODEL

	THROTTLE	BRAKE
ELECTRIC EPA		

BODY & WING

BODYSHELL Deltaplastik
WING BRAND Ultimate
WING MODEL Lexan
WING POSITION ☐1 ☐2 ☐3 ■4
1 IS FRONT HOLE (WING BACK)
WING FLAPS BIG☐ SMALL☐ BOTH☐
GURNEY NO☐ SMALL☐ BIG☐

NOTES

Wide 3 hole accermann plate link all the way forward. New knuckle plates 1 dot with 0 dot insert.

Reset Form